ADC Lab Logbook

Part 4 | Section 3: Differential Amplifier (Long-Tailed Pair)

Section 3: Differential Amplifier (Long-Tailed Pair)

Introduction

An op-amp input stage must amplify the difference between two inputs (differential mode) while rejecting signals common to both (common mode). The long-tailed pair (LTP) achieves this: with equal inputs, I_C splits equally between T_1 and T_2; a differential input unbalances the currents, producing a large change in V_{out}. A common-mode signal also changes V_o^u, but the large emitter resistor R^M provides degeneration that suppresses it.

Circuit: T_1 (V_{in}+) and T_2 (V_{in}−) are 2N2907 PNP transistors with shared emitter current I_o through R_E = 4.3 kΩ. V_{out} is taken at the collector of T_2 across R_C = 2 kΩ. Supply: ±5 V.

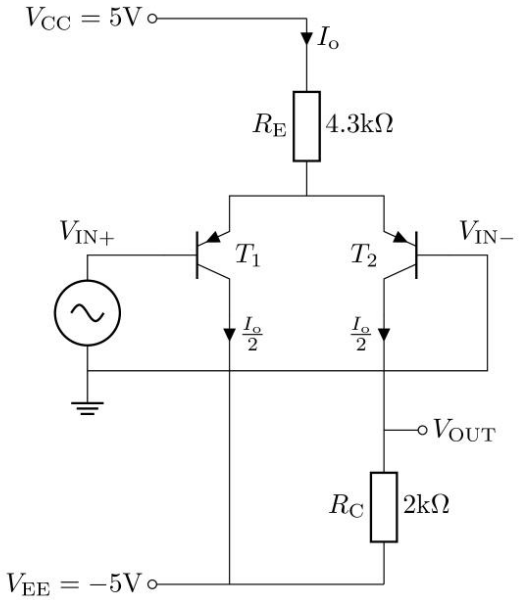

Differential Gain

Theoretical Analysis

From the small-signal model, the differential voltage gain is:

$$A_d = v_o/v_d = (g_{m,T_2}/2) \cdot (1/r_{o,T_2} + 1/R_C)^{-1}$$

With $I_{C,T_2} = I_o/2 = 0.5$ mA:

$$g_m = I_C/V_T = 0.5m/0.025 = 0.02\ S$$

$$r_o = V_A/I_C = 120/0.5m = 240\ k\Omega$$

$$A_d = 0.01 \cdot (1/240k + 1/2k)^{-1} = 19.83$$

$$A_d\ (dB) = 20 \cdot \log(19.83) = 25.95\ dB$$

The LTspice AC simulation gave a measured differential gain of **25.675 dB**, in close agreement with the theoretical value of 25.95 dB.

Differential Input Resistance

From the small-signal model:

$$r_{ind} = 2r_{be} = 2\beta/g \quad = 2 \times 250/0.02 = 25\ k\Omega$$

A 10 kΩ resistor was added in series with the base of T_1, reducing the gain to 22.455 dB. Using the gain-change method:

$$A_V' = A_V \cdot r_{in} / (r_{in} + 10k)$$

$$r_{in} = 10k \cdot 10^{(22.455/20)} / (10^{(25.675/20)} - 10^{(22.455/20)}) \approx 22.3\ k\Omega$$

The measured value of 22.3 kΩ closely matches the theoretical prediction of 25 kΩ.

Common-Mode Gain and CMRR

Common-Mode Gain

The small-signal model gives the common-mode gain:

$$A_C = v_o/v_C = -R_C / (2R_E)$$

$$A_C = -2k/(2 \times 4.3k) = -0.233 \implies -12.6\ dB$$

The LTspice AC simulation confirmed a common-mode gain of **−12.8 dB**.

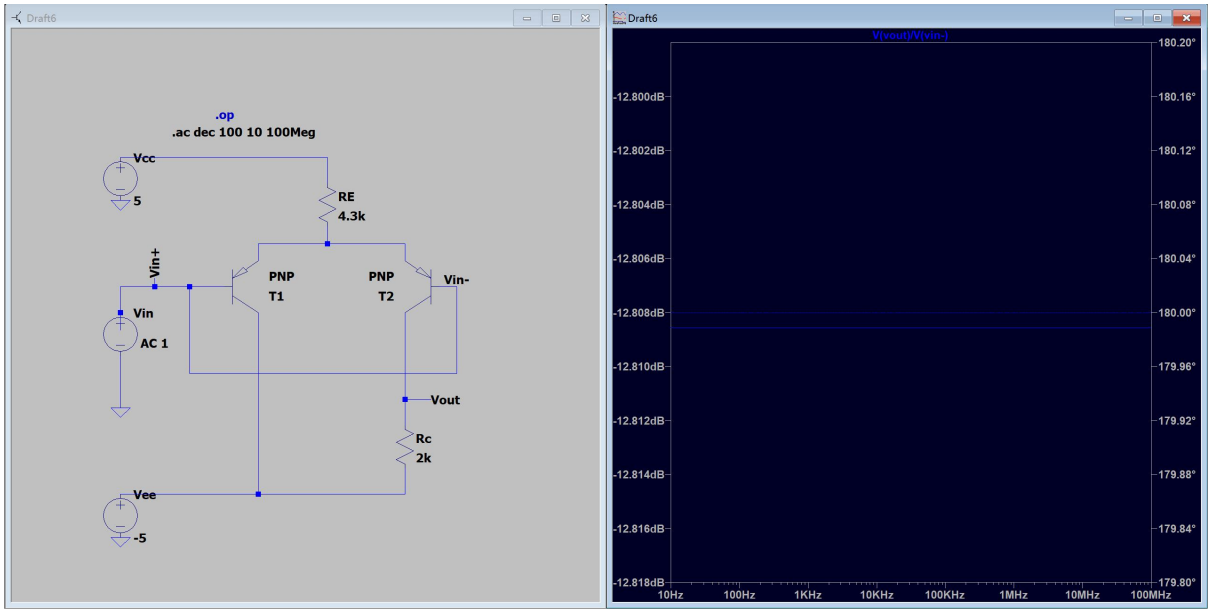

Common Mode Rejection Ratio (CMRR)

The CMRR is the ratio of differential gain to common-mode gain:

$$CMRR = A_d/A_C = g \quad \cdot R_E = R_E \cdot I_o/(2V_T)$$

$$= 0.02 \times 4.3k = 86 \implies 38.69\ dB$$

From the simulated gains: CMRR = 10^(25.675/20) / 10^(−12.8/20) ≈ 259 ⟹ 48.3 dB (measured values).

Improving CMRR and Gain with Active Load (Current Mirror as Tail)

Circuit Modification

The tail resistor R_E was replaced by a 2N2907 current mirror (T_3 –T_5) supplying I_o = 1 mA, with R_1 = 8600 Ω. Replacing R_E with a high-impedance current source greatly increases the common-mode rejection ratio, because the current source maintains I_o nearly constant regardless of common-mode input, suppressing the common-mode gain.

The circuit diagram is in the next page.

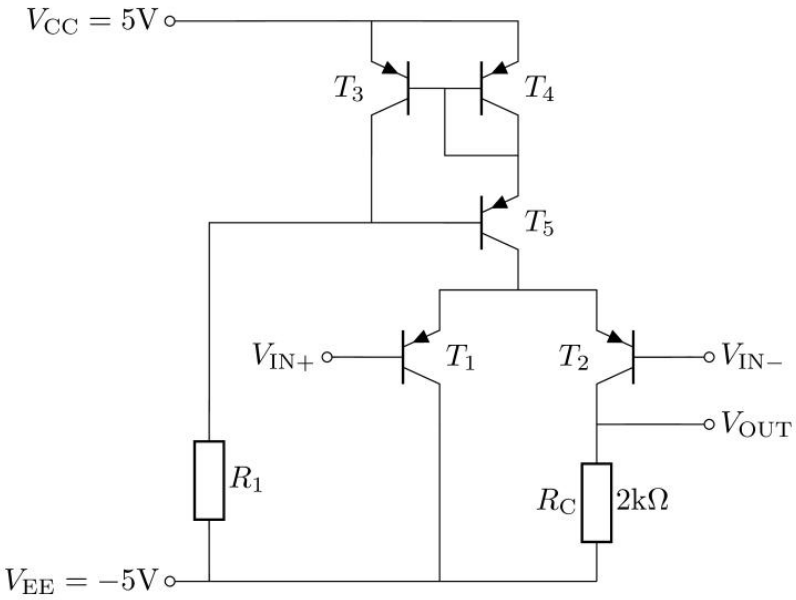

LTP with Active Tail — Results

- **Differential gain:** 25.64 dB
- **Common-mode gain:** −91.81 dB

$$CMRR = A_d/A_C = 10^{(25.64/20)} / 10^{(-91.81/20)} = 745589.9 \Longrightarrow 117.5\ dB$$

Replacing the tail resistor with a current mirror increased the CMRR from ~48 dB to **117.5 dB**, a dramatic improvement. This occurs because the Wilson mirror has a very high output impedance, effectively acting as an ideal current source and eliminating the path through which common-mode signals would otherwise cause emitter voltage variations.

LTP with Second Current Mirror (Active Load on Collector)

Circuit and Analysis

A second current mirror (T_3 –T_4 –T_5 , PNP) was added as an active collector load, reflecting the collector current of T_1 into the output node at T_2 .

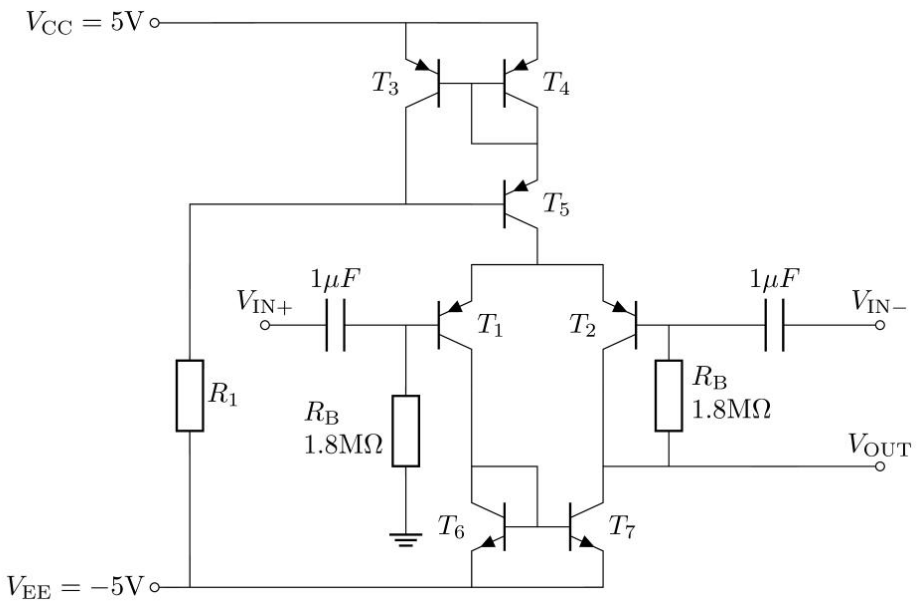

This doubles the effective transconductance seen at the output, significantly increasing the differential gain. The small-signal differential gain becomes:

$$A_d = g_{,T_2} \cdot (1/r_{o,T_2} + 1/r_{o,T_7} + 1/R_B)^{-1}$$

With $I_{C,T_2} = I_{C,T_7} = 0.5$ mA, V_A(NPN) = 100 V, V_A(PNP) = 200 V, R_B = 1.8 MΩ:

$$= (0.5m/0.025) \cdot (0.5m/100 + 0.5m/200 + 1/1.8M)^{-1}$$

$$= 20 \cdot (5\times10^{-6} + 2.5\times10^{-6} + 5.56\times10^{-7})^{-1}$$

$$\approx 2037.1 \implies 66.3\ dB$$

The LTspice AC simulation confirmed a measured differential gain of **66.1 dB**, in close agreement with the theoretical prediction of 66.3 dB.

Adding the second current mirror as an active collector load increased the midband differential gain from 25.64 dB (simple resistor load) to 66.1 dB — an improvement of over 40 dB — by exploiting the high output impedance of the current mirror to maximise the voltage developed at the output node.